Overall Size

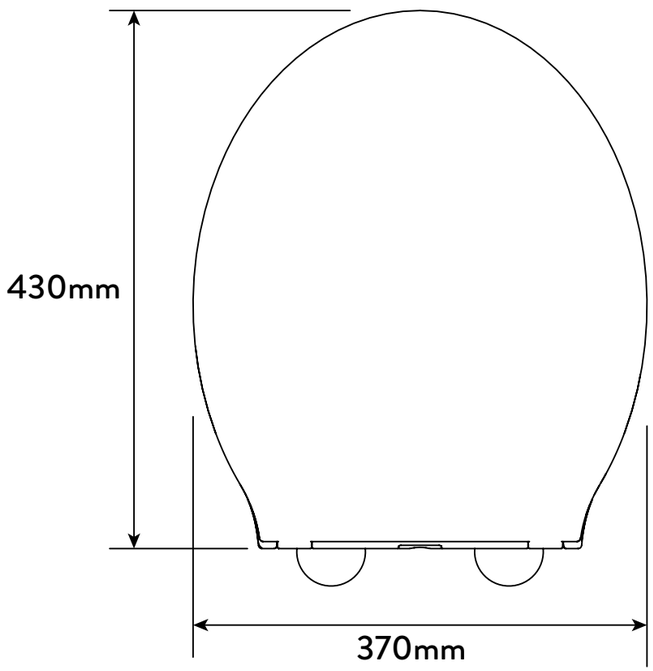

Min/Max Adjustment